Beiträge zur Algebra und Geometrie
Contributions to Algebra and Geometry
Volume 50 (2009), No. 2, 603-605.

Erratum to: A. Joos: Covering the Unit Cube by Equal Balls

Beitr. Algebra Geom. **49** (2008), 599–605

A. Joós

College of Dunaújváros
2400 Dunaújváros, Táncsics M. u. 1/a, Hungary
e-mail: ajoos@kac.poliod.hu

We showed in the above paper that 8 balls with radius $\sqrt{\frac{5}{12}}$ can cover the 4-dimensional unit cube. We wanted to show that 8 congruent balls with smaller radius can not cover the 4-dimensional unit cube. We showed that each ball contains an edge completely. We assumed that each ball contains an edge completely and additionally parts of 6 edges which are incident with one of the 2 vertices of the edge. An anonymous referee found a gap in the proof that the balls can contain some further part of some edge of the cube. We are closing this gap.

We prove Lemma 5 and in the proof of the Theorem of the above paper we have to use Lemma 5 instead of Lemma 4.

Lemma 5. *Let $a_1, a_2 \in B^4(o,r)$ be two vertices of C^4, where $\frac{1}{2} < r < \sqrt{\frac{5}{12}}$. Let E be the set of the edges of C^4. Then*

$$\sum_{e \in E} \operatorname{diam}(B^4(o,r) \cap e) < 4.$$

Proof. Without loss of generality we can assume that $a_1 = (0,0,0,0), a_2 = (0,0,0,1)$. As in Lemma 4 (of the above paper) we can assume that $r = \sqrt{\frac{5}{12}}$. If $B^4(o,r)$ intersects only the edges emanating from $B^4(o,r)$ then the statement comes from Lemma 4 (of the above paper).

0138-4821/93 \$ 2.50 © 2009 Heldermann Verlag

We assume that $B^4(o,r)$ intersects an edge not emanating from a point of $B^4(o,r)$. Of course, $B^4(o,r)$ can not contain three vertices of C^4. Denote by ab the edge with endpoints a and b. $B^4(o,r)$ can intersect only one of the edges $(1,0,0,0)(1,0,0,1)$, $(0,1,0,0)(0,1,0,1)$ and $(0,0,1,0)(0,0,1,1)$. Without loss of generality we assume that $B^4(o,r)$ intersects the edge $(1,0,0,0)(1,0,0,1)$. Then $B^4(o,r)$ does not intersect the edges $(0,1,0,0)(0,1,0,1)$ and $(0,0,1,0)(0,0,1,1)$. By Lemma 2 (of the above paper) we can assume that $o_4 = \frac{1}{2}$. Denote by $2h$ the length of the intersection of the ball with the edge $(1,0,0,0)(1,0,0,1)$ (Figure 1). Of course, $0 \le 2h \le 2\sqrt{\frac{2}{\sqrt{6}} - \frac{3}{4}} = 0.51\ldots$. Denote by e_1, e_2, e_3, e_4, e_5 and e_6 the edges $(0,0,0,0)(1,0,0,0)$, $(0,0,0,0)(0,1,0,0)$, $(0,0,0,0)(0,0,1,0)$, $(0,0,0,1)(1,0,0,1)$, $(0,0,0,1)(0,1,0,1)$ and $(0,0,0,1)(0,0,1,1)$, respectively. The length of $B^4(o,r) \cap e_1$ and $B^4(o,r) \cap e_4$ are at most $1 + \frac{1}{\sqrt{6}} - \sqrt{\frac{5}{12} - h^2}$, respectively.

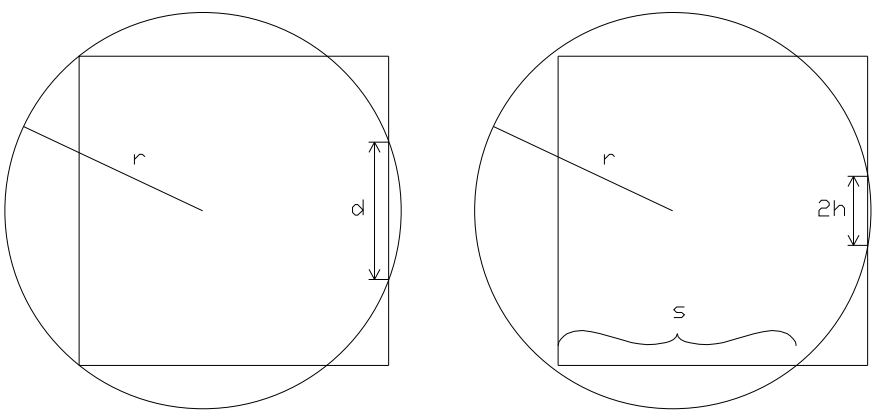

Figure 1. The Four Circle Problem. $r = \sqrt{\frac{5}{12}}, s = 1 + \frac{1}{\sqrt{6}} - \sqrt{\frac{5}{12} - h^2}, d = 2\sqrt{\frac{2}{\sqrt{6}} - \frac{3}{4}} = 0.51\ldots$

We will show that the maximum of $\mathrm{diam}(B^4(o,r) \cap e_2) + \mathrm{diam}(B^4(o,r) \cap e_3)$ and $\mathrm{diam}(B^4(o,r) \cap e_5) + \mathrm{diam}(B^4(o,r) \cap e_6)$ are at most $4\sqrt{3}\frac{\sin\phi}{3}$, where $\phi = \arccos\frac{3/4+h^2}{2/\sqrt{6}}$. Denote by $P_{i,j}$ the affine hull of the edges e_i, e_j, where $\{i,j\} \subset \{1,\ldots,6\}$ and $i \ne j$. Let B_0^3, B_1^3 be the intersection of the ball $B^4(o,r)$ and the hyperplane $x_4 = 0, x_4 = 1$, respectively. If $\mathrm{diam}(B^4(o,r) \cap e_2) + \mathrm{diam}(B^4(o,r) \cap e_3)$ and $\mathrm{diam}(B^4(o,r) \cap e_5) + \mathrm{diam}(B^4(o,r) \cap e_6)$ are the greatest then $(0,0,0,0)$ and $(0,0,0,1)$ lie on the relative boundary of B_0^3, B_1^3, respectively. Thus we can assume that $(0,0,0,0)$ and $(0,0,0,1)$ lie on the boundary of $B^4(o,r)$. Then o lies on the 3-dimensional sphere with centre $(0,0,0,\frac{1}{2})$ and radius $\frac{1}{\sqrt{6}}$ which lies on the hyperplane $x_4 = \frac{1}{2}$. Additionally o lies on the 3-dimensional sphere with centre $(1,0,0,\frac{1}{2})$ and radius $\sqrt{\frac{5}{12} - h^2}$ which lies on the hyperplane $x_4 = \frac{1}{2}$. Thus o lies on the 2-dimensional sphere with centre $(\frac{\cos\phi}{\sqrt{6}}, 0, 0, \frac{1}{2})$ and radius $\frac{\sin\phi}{\sqrt{6}}$ which lies on the affine plane $x_1 = \frac{\cos\phi}{\sqrt{6}}$, $x_4 = \frac{1}{2}$, where $\phi = \arccos\frac{3/4+h^2}{2/\sqrt{6}}$ (Figure 2).

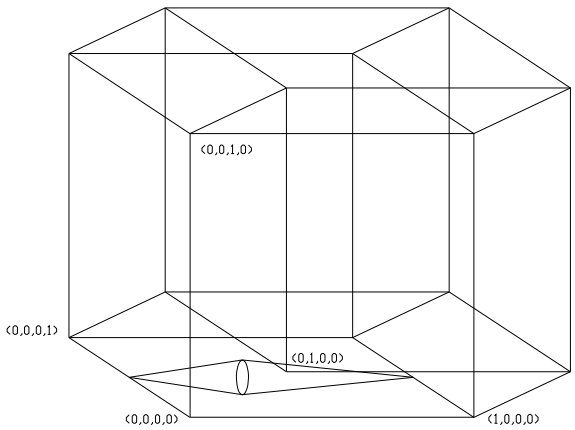

Figure 2. The Four Circle Problem

So $o = (\frac{\cos\phi}{\sqrt{6}}, \frac{\sin\phi}{\sqrt{6}}\sin\psi, \frac{\sin\phi}{\sqrt{6}}\cos\psi, \frac{1}{2})$, where $\psi \in [0, 2\pi)$. Therefore $d(o, P_{2,3}) = \sqrt{\frac{\cos^2\phi}{6} + \frac{1}{4}}$. Then the radius of the 2-dimensional ball $B^2 = B^4(o,r) \cap P_{2,3}$ is $r_1 = \sqrt{\frac{5}{12} - (\frac{\cos^2\phi}{6} + \frac{1}{4})} = \frac{\sin\phi}{\sqrt{6}}$. Thus $\operatorname{diam}(B^4(o,r) \cap e_2) + \operatorname{diam}(B^4(o,r) \cap e_3) \leq 2\sqrt{2}r_1 = 2\sqrt{3}\frac{\sin\phi}{3}$. Similarly we get that $\operatorname{diam}(B^4(o,r) \cap e_5) + \operatorname{diam}(B^4(o,r) \cap e_6) \leq 2\sqrt{3}\frac{\sin\phi}{3}$. Thus we have $\sum_{e \in E} \operatorname{diam}(B^4(o,r) \cap e) = 1 + \sum_{i=1,\ldots,6} \operatorname{diam}(B^4(o,r) \cap e_i) + 2h \leq 1 + 2\left(1 + \frac{1}{\sqrt{6}} - \sqrt{\frac{5}{12} - h^2}\right) + 4\sqrt{3}\frac{\sin\phi}{3} + 2h \leq 1 + 2\left(1 + \frac{1}{\sqrt{6}} - \sqrt{\frac{5}{12} - h^2}\right) + 4\sqrt{3}\frac{\sin\phi}{3} + 2\sqrt{\frac{2}{\sqrt{6}} - \frac{3}{4}} =: f(h)$.

Then $f'(h) = \frac{12h}{\sqrt{15-36h^2}} - \frac{\sqrt{3}}{12}\frac{288h+384h^3}{\sqrt{10-144h^2-96h^4}}$. We have $f'(h) < 0$, where $0 < h < \sqrt{\frac{2}{\sqrt{6}} - \frac{3}{4}}$, if and only if $0 < -384h^6 - 368h^4 + 96h^2 + 85$ that is true if $0 < h < \sqrt{\frac{2}{\sqrt{6}} - \frac{3}{4}}$. So the maximum value of f between 0 and $\sqrt{\frac{2}{\sqrt{6}} - \frac{3}{4}}$ is achieved at 0 and this maximum value is $3.95\ldots$. Therefore $f(h) \leq 4$. This completes the proof of the lemma. $\square$

Acknowledgement. I am indebted to K. Swanepoel.

Received October 8, 2008